AMERICAN SPECIALTIES, INC.
441 Saw Mill River Road, Yonkers, NY 10701
(914) 476.9000 • (914) 476.0688
www.americanspecialties.com

MODEL №:	9018
ISSUED:	08/13
REVISED:	5 Aug 2014

RECESS MOUNTED STAINLESS STEEL HORIZONTAL BABY CHANGING STATION (PG 1 of 2)

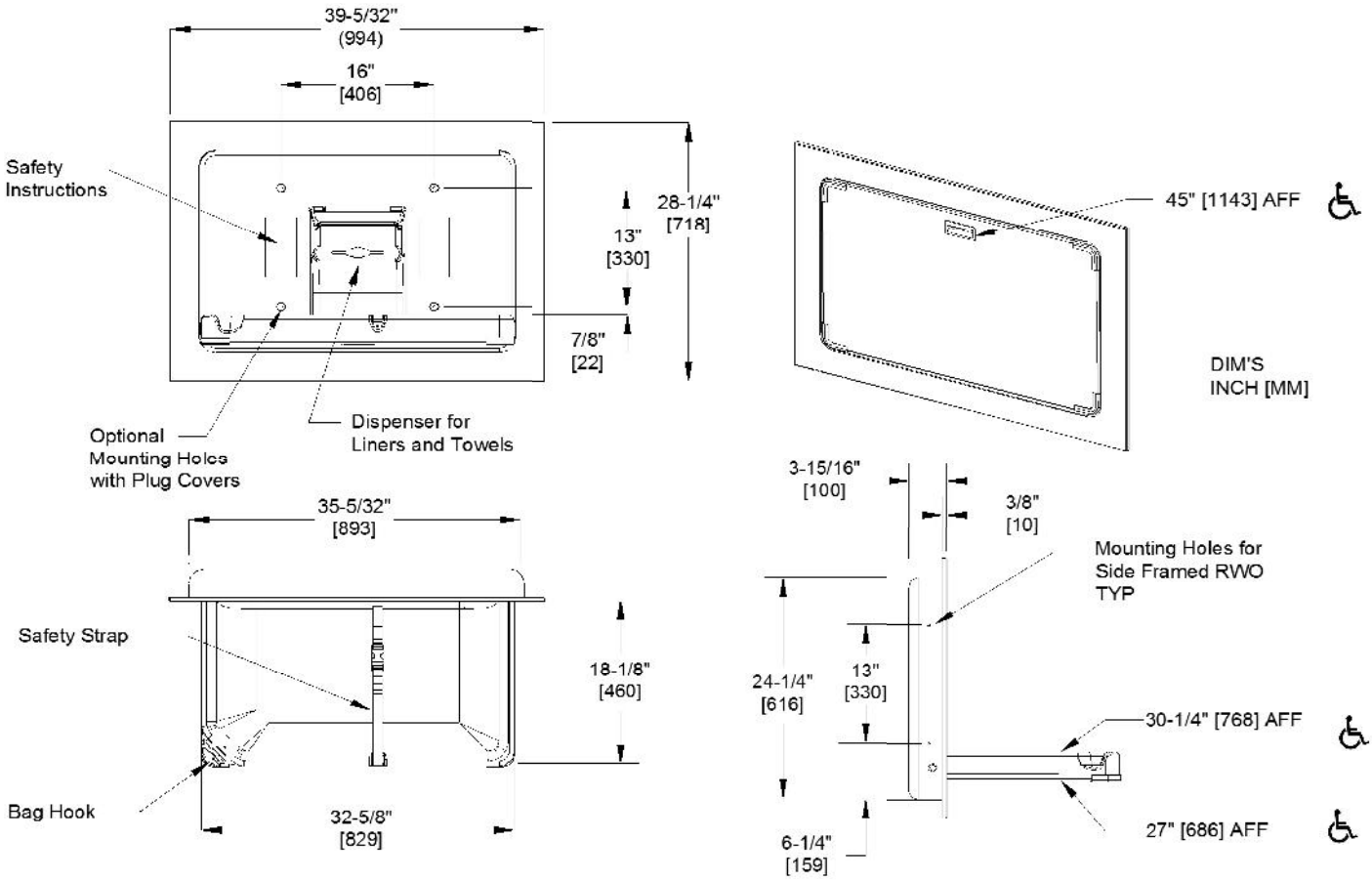

SPECIFICATION

Recess Mounted Stainless Steel Baby Changing Station shall be horizontal format and shall protrude no more than 3/8″ (10 mm) from wall when in retracted position. Unit shall comply with ASTM F2285-04 and EN 12221-1. Unit shall support a static load of 300 lbs. (136.1 kg) and be tested in excess of 350 lbs. (158.8 kg). Unit shall be fabricated of non-porous plastic (FDA approved HDPE) tested according to ASTM G21 and ASTM G22. Unit shall contain a door facing and wall flange dress trim of satin finished 18 gauge type 304 stainless steel. No parts of the operating mechanism shall be accessible when unit is open or closed to provide a tamper-resistant and pinch proof user environment. Unit shall have a damped gas spring to assist user in opening and closing bed tray with the use of one hand. Unit shall be provided with one integral heavy-duty bag hook. Unit shall provide a bed-liner dispenser that may be easily converted to a multi-fold towel dispenser with no adapters. Unit shall provide graphics and instructions in four languages on interior back. Unit shall be provided with an adjustable two-part vinyl coated child protection safety-strap mounted with concealed fasteners on high walls of cradle. Entire unit shall be assembled of completely sealed components to provide easy cleaning and no penetration zones to harbor microbes or bacteria. Unit shall mount on standard stud wall dimensions and with proper anchoring may mount on all suitable wall constructions. Mounting fasteners shall be concealed after installation using color matched recess plug-covers supplied. Unit bed tray and back shall be light grey in color and entire unit shall be recyclable at end of usable life. Unit shall be warranted for five (5) years against defects in material or workmanship.

Recess Mounted Stainless Steel Horizontal Baby Changing Station shall be Model № 9018 as manufactured by American Specialties, Inc., 441 Saw Mill River Road, Yonkers, NY 10701-4913

THIS MANUFACTURER RESERVES THE RIGHT TO MAKE CHANGES IN DESIGN OR DIMENSIONS WITHOUT FORMAL NOTICE

AMERICAN SPECIALTIES, INC.
441 Saw Mill River Road, Yonkers, NY 10701
(914) 476.9000 • (914) 476.0688
www.americanspecialties.com

MODEL №:	9018
ISSUED:	08/13
REVISED:	5 Aug 2014

RECESS MOUNTED STAINLESS STEEL HORIZONTAL BABY CHANGING STATION (PG 2 of 2)

INSTALLATION

Installation instructions along with operation and maintenance manual are provided with each unit. Unit is recess mounted using hardware supplied through concealed mounting holes. Hardware kit supplied has fasteners suitable for metal or wood stud walls in dry locations and general hollow wall construction where adequate substrate strength is obtained. Fasteners and anchors for masonry walls are not provided. Wall reinforcement must be suitable to sustain transfer of maximum unit loading. Mounting hole plug covers are supplied to conceal fasteners after installation. Provide rough wall opening of required depth from face of finished wall. Mount unit in properly framed RWO using four (4) № 10 x 1-1/2″ (M5x38) self-tapping pan head screws through side holes. For alternate rear holes mounting see installation instructions packed with unit. Alternate suggested mounting where wall depth and framing reinforcement permits is to use four (4) 3/8″ x 2″ (M10x51) lag screws (or other fasteners appropriate for wall conditions, not supplied) through mounting holes in rear wall of cabinet. Use washers and mounting hole plug covers provided.

RWO required: 35-1/2" W x 24-1/2" H x 4" min D (902x622x102)

For compliance with 2010 ADA Accessibility Standards, install unit so that top edge of changing table is 30-1/4" above finished floor (AFF). See installations instructions packed with unit.

If surface mounting this unit using optional dress collar use hardware provided if appropriate or other hardware suitable for site conditions (by others). Follow procedure in instructions provided and as summarized here:

1. Locate wall studs at 16" [406] OC for fastening the station. If two (2) wall studs cannot be used, use two (2) screws into ONE stud and drill pilot holes and install toggle fasteners securely in the wall at non-stud location.
2. Attach unit to wall studs with four (4) 1/4" x 3" long Phillips pan head self-tapping screws through flat washers.
3. Where wall studs are not available attach with four (4) 1/4" - 20 x 3" pan head bolts with flat washers into toggles or expansion nuts.

OPERATION

Unit platform is shaped to keep a child restrained from rolling out of the bed. Unit is easily opened and closed by user with one hand in any location and handle cavity is provided on door face for preferred use. Unit is operable with less than 5lb of force (22.2N) while not requiring any tight grasping, pinching or twisting of the wrist. Bed liner/towel dispenser presents liners or towels for user hygiene and convenience. Dispenser lid is provided for sanitary protection and ease of loading of wipes or liners. Safety strap is easily adjustable by user for baby size and Sure-Lock latch securely resists opening until released by opposing finger pressure by adult caretaker/parent. Liners/towels are easily replenished by service personnel as required.

THIS MANUFACTURER RESERVES THE RIGHT TO MAKE CHANGES IN DESIGN OR DIMENSIONS WITHOUT FORMAL NOTICE